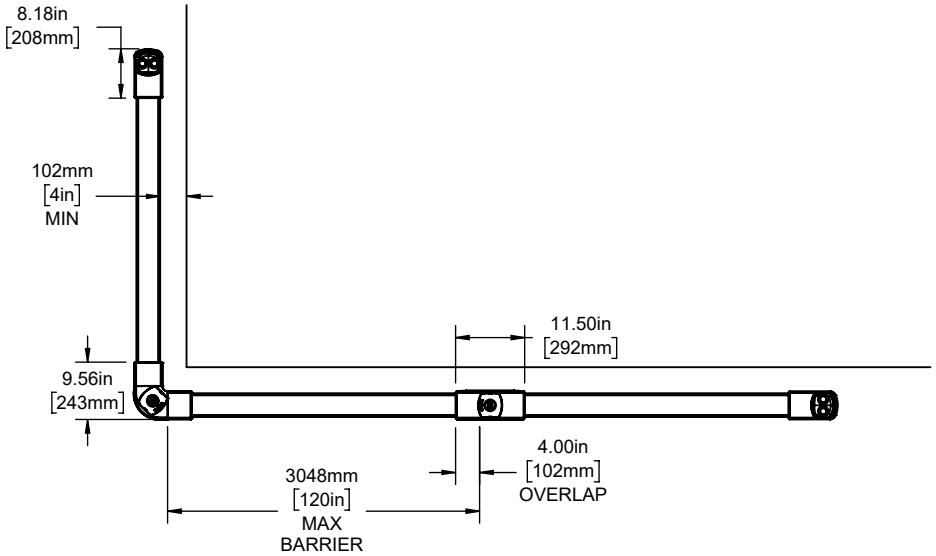

Top View

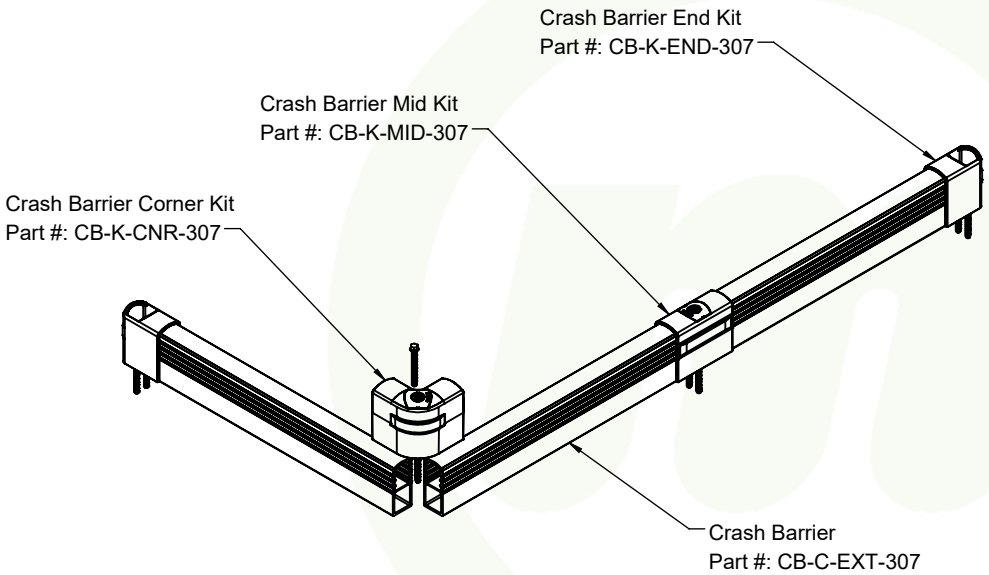

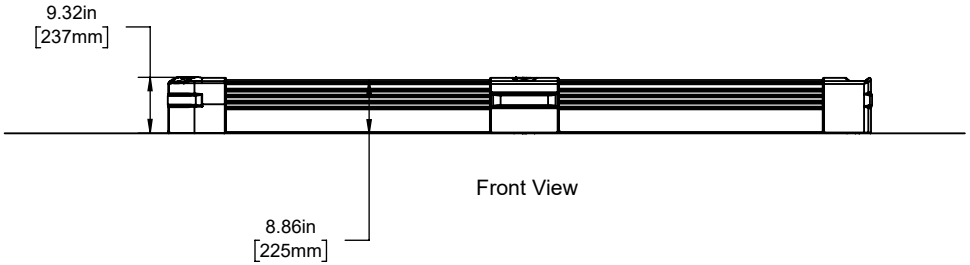

Front View

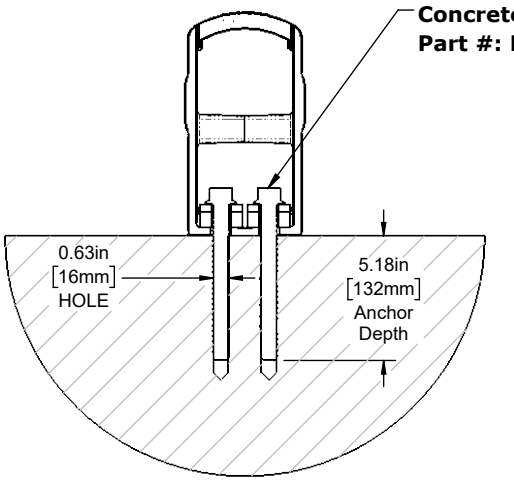

Customer Drawing

CrashBarrier

McCue

McCue US
(978) 741 8500
CustomerCare@mccue.com

McCue UK
+44 1908-365-511
UKCServices@mccue.com

McCue China
+86-592-2200 790
ChinaOffice@mccue.com

mccue.com

PROPRIETARY-CONFIDENTIAL: This document contains information proprietary to McCue Corporation. This information is not to be used in any way, disclosed to others or reproduced, in whole or in part, except as expressly authorized in writing by McCue Corporation. Any reproduction of this document, in whole or in part, must include this notice.